Siphon for basin - Matte Black

LULU

10 060 970 Product version from 10/1/2023

● rosette Ø 70 mm

Fits: LULU, TARA, LISSÉ, VAIA, META

Matte Black	10 060 970-33
Chrome	10 060 970-00
Brushed Platinum	10 060 970-06
Platinum	10 060 970-08
Durabrass (23kt Gold)	10 060 970-09
Dark Chrome	10 060 970-19
Light Gold	10 060 970-26
Brushed Light Gold	10 060 970-27
Brushed Durabrass (23kt Gold)	10 060 970-28
Brushed Bronze	10 060 970-42
Brushed Champagne (22kt Gold)	10 060 970-46
Champagne (22kt Gold)	10 060 970-47
Brushed Chrome	10 060 970-93
Brushed Dark Platinum	10 060 970-99

We reserve the right to change designs, product range and technical specifications without prior notice.
More information can be found at: www.dornbracht.com +49 (0) 2371 8899 900 mail@dornbracht.com

Siphon for basin - Matte Black

LULU

10 060 970 Product version from 10/1/2023

mm [inches]

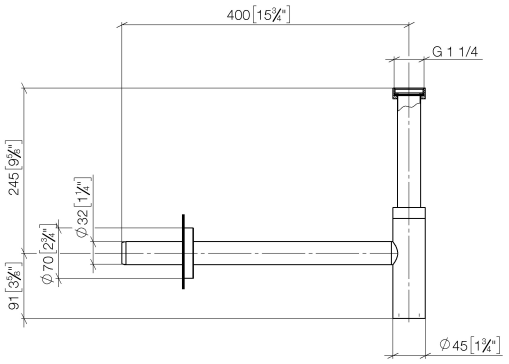

Siphon for basin - Matte Black

LULU

10 060 970 Product version from 10/1/2023

Parts for other finishes can be found here: Chrome

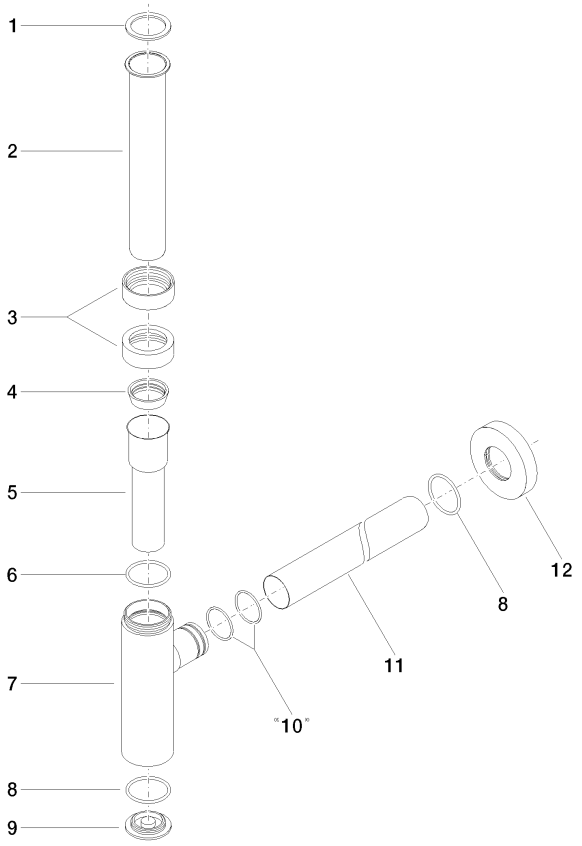

Spare parts list

No.	Item Number	Name	Quantity used	Delivery time
1	09 14 20 060 90	seal	1	2
2	09 28 23 007-33	pipe	1	30
3	09 23 30 022-33	nut	2	60
4	09 14 03 015 90	seal	1	2
5	09 28 23 019-33	pipe	1	-
	Spare part can no longer be ordered, please order the replacement item			
6	09 14 10 149 90	seal	1	2
7	04 11 01 045 00-33	casing	1	60
8	09 14 10 148 90	seal	2	2
9	09 21 02 004-33	lid	1	30
10	09 14 10 112 90	seal	2	2
11	09 28 23 018-33	pipe	1	60
12	09 27 20 060-33	rosette	1	30

We reserve the right to change designs, product range and technical specifications without prior notice.
More information can be found at: www.dornbracht.com +49 (0) 2371 8899 900 mail@dornbracht.com